KEMLAN
ESTABLISHED 1969

KEMLAN XL FREESTANDING Mk. III

INSTALLATION & OPERATING INSTRUCTIONS

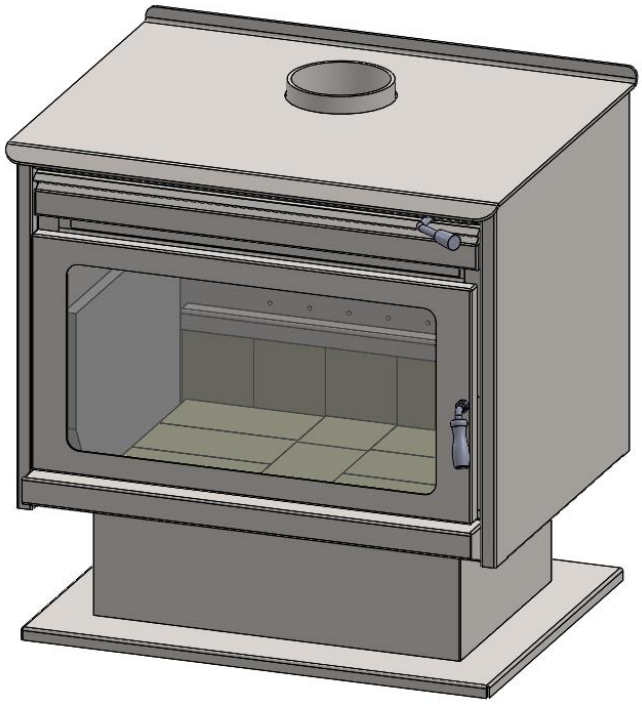

IMPORTANT:
INSTALLER PLEASE LEAVE THESE INSTRUCTIONS WITH THE UNIT ON COMPLETION.

1x900mm LENGTH HEATSHIELD OR DECROSHIELD MUST BE FITTED TO THE FLUE TO ACHIEVE CLEARANCES TO HEAT SENSITIVE MATERIALS.

10 YEAR FIREBOX WARRANTY

The firebox is covered by a 10 year warranty.
Other parts are covered by a one year limited warranty.

Head Office – 13 French Avenue, Brendale, Queensland 4500
Telephone – PH: (07) 3490 5500
Facsimile – FAX: (07) 3490 5520
Website: - www.jetmaster.com.au
Business hours: - Monday to Thursday 7:30am-4:00pm. Friday 7:30am-2:00pm
Email: - sales@jetmaster.com.au

OVERALL DIMENSIONS

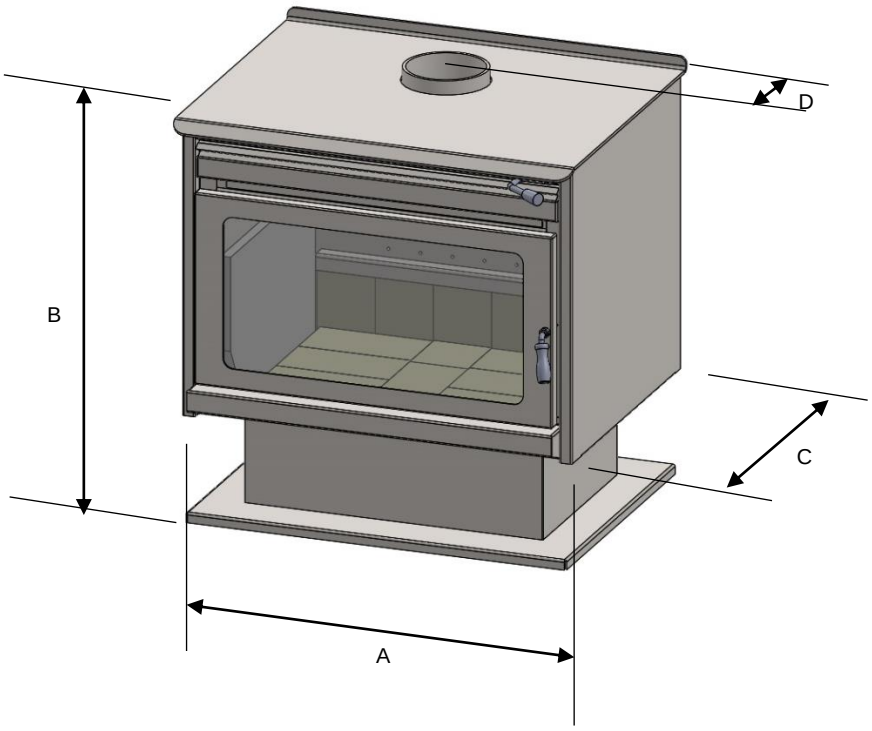

OVERALL DIMENSIONS:

A - 785mm width
B - 838mm height
C - 603mm depth
D - 216mm depth (centre of flue to back)

TECHNICAL SPECIFICATIONS

MINIMUM CLEARANCES FOR THE KEMLAN XL SOLID FUEL APPLIANCE
INSTALLED WITH A DEFAULT FLUE KIT

STANDARD INSTALLATION

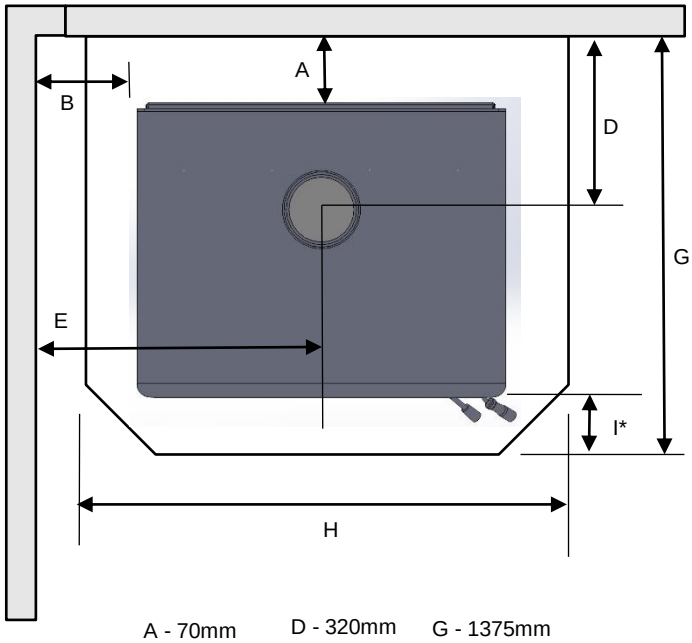

A - 70mm
B - 490mm
C - 50mm
D - 320mm
E - 945mm
F - 620mm
G - 1375mm
H - 1120mm
I* - 500mm

CORNER INSTALLATION

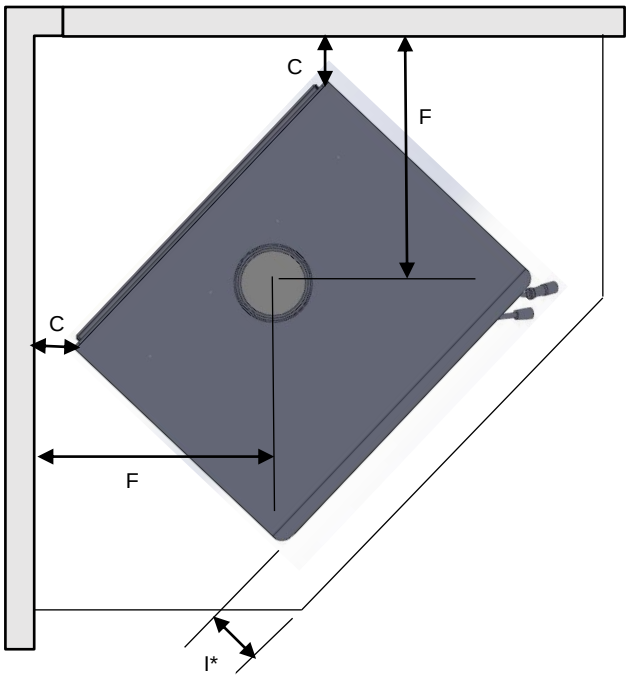

*As per Clause 3.3.3 of AS/NZS 2918 for floor protector construction requirements.

Where a sample appliance installation (or prototype installation) has not been tested, the floor protector shall extend either to a distance of not less than 500mm (measurement C) beyond any part of the appliance or a lesser distance at which it forms a abutment with a wall or heat shield (subject to the requirements of Clause 3.2).

Glass viewing area - 602mm wide x 302mm high
Flue pipe - ø150mm – top exit
Shipping weight - 215kg

All dimensions shown are approximate. Check all dimensions accurately before installation. Before installing refer to the installation instructions.

In line with our policy of continuous improvement, we reserve the right to alter specifications without notice.

CONSTRUCTION
- 6 & 8mm heavy duty steel firebox – fully welded
- 25mm thick firebrick lined floor
- 19mm ceramic lined sides and baffle

PERFORMANCE
- Heating capacity – 220-320m2 (23-33 squares)
- Peak heat output – 21.6kW
- Average output – 1.1g/kg
- Average efficiency – 61%

NOTE:

The floor protector consists of a 12mm thick cement fibre sheet which has a thermal resistance of 0.8² k/W, per 4mm thick sheet

Heating capacity of this appliance is given as a guide only and may vary depending on the climate zone and type of dwelling (floor plan and degree of insulation). Consult your local authorised distributor to determine realistic expectations for your home.

Heat output and fuel consumption of this appliance is dependent on the moisture content, size, loading geometry and the type of hardwood used.

The appliance complies to the safety standards AS/NZS 2918. When in use some parts may become hot. A suitable fireguard is recommended where the very young, elderly or infirm are concerned.

KEMLAN XL

BAFFLE PLATE INSTALLATON INSTRUCTIONS

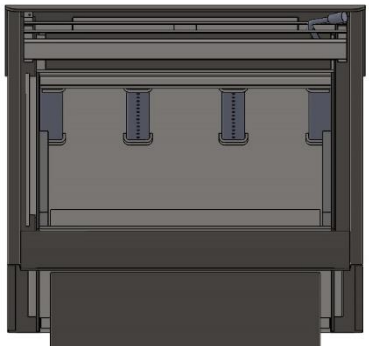

1. MAKE SURE TO INSTALL AIR TUBE AS REQUIRED. THE OPENING ON THE TUBE END NEEDS TO BE AGAINST THE BACK WALL. THE 2 MIDDLE AIR TUBES EXIT HOLES MUST BE POINTING TO THE BOTTOM OF THE FIRE BOX AND THE SIDE WALLS. THE 2 SIDE AIR TUBE HOLES NEEDS TO POINT TOWARDS THE CENTRE OF THE APPLIANCE

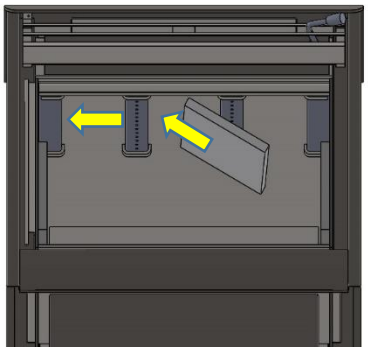

2. CERAMIC BAFFLE PLATES SIZE 205mmX340mm. INSTALL THE BAFFLE PLATE 340mm FRONT TO BACK, 205mm SIDE TO SIDE. GET BAFFLE PLATE INSIDE THE FIREBOX AND TILT ON AN ANGLE. PUSH BAFFLE PLATE OVER THE MIDDLE AIR TUBE UNTIL IT IS TOUCHING THE SIDE WALL

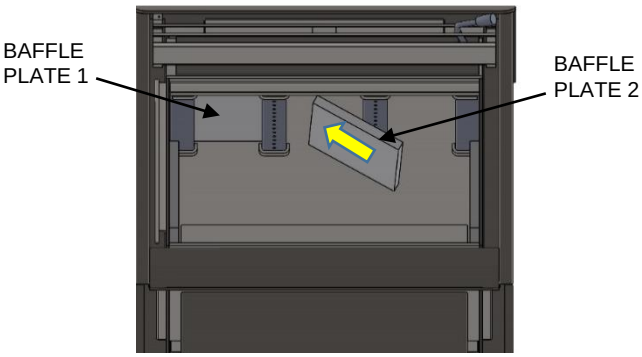

3. REPEAT STEP 2 PROCESS BUT THIS TIME MAKE SURE THE BAFFLE PLATE 2 SLIDES OVER BAFFLE PLATE 1.

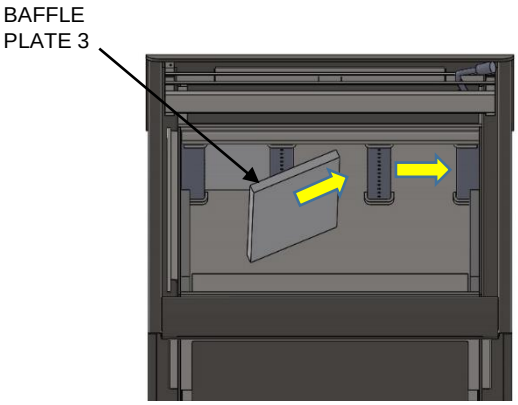

4. AGAIN REPEAT STEP 2 PROCESS BUT THIS TIME TILT THE BAFFLE PLATE THE OPPOSITE WAY. THE BAFFLE PLATE WILL BE INSTALLED ON THE RIGHT HAND SIDE. PUSH ALL THE WAY TO THE SIDE AND BACK.

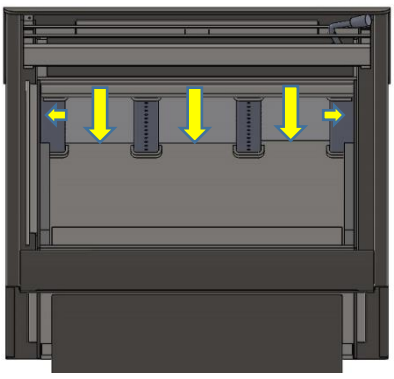

5. WHEN THE BAFFLE PLATES 1 AND 3 ARE IN POSITION, MOVE BAFFLE 2 FROM ATOP BAFFLE PLATE 1 INTO PLACE IN THE MIDDLE GAP, CENTRALISE AND PUSH TOWARDS THE BACK WALL. THIS WILL COMPLETE THE INSTALLATION

INSTALLATION INSTRUCTION

TRIPLE FLUE KIT

INSTALLATION TO COMPLY WITH AS/NZS 2918

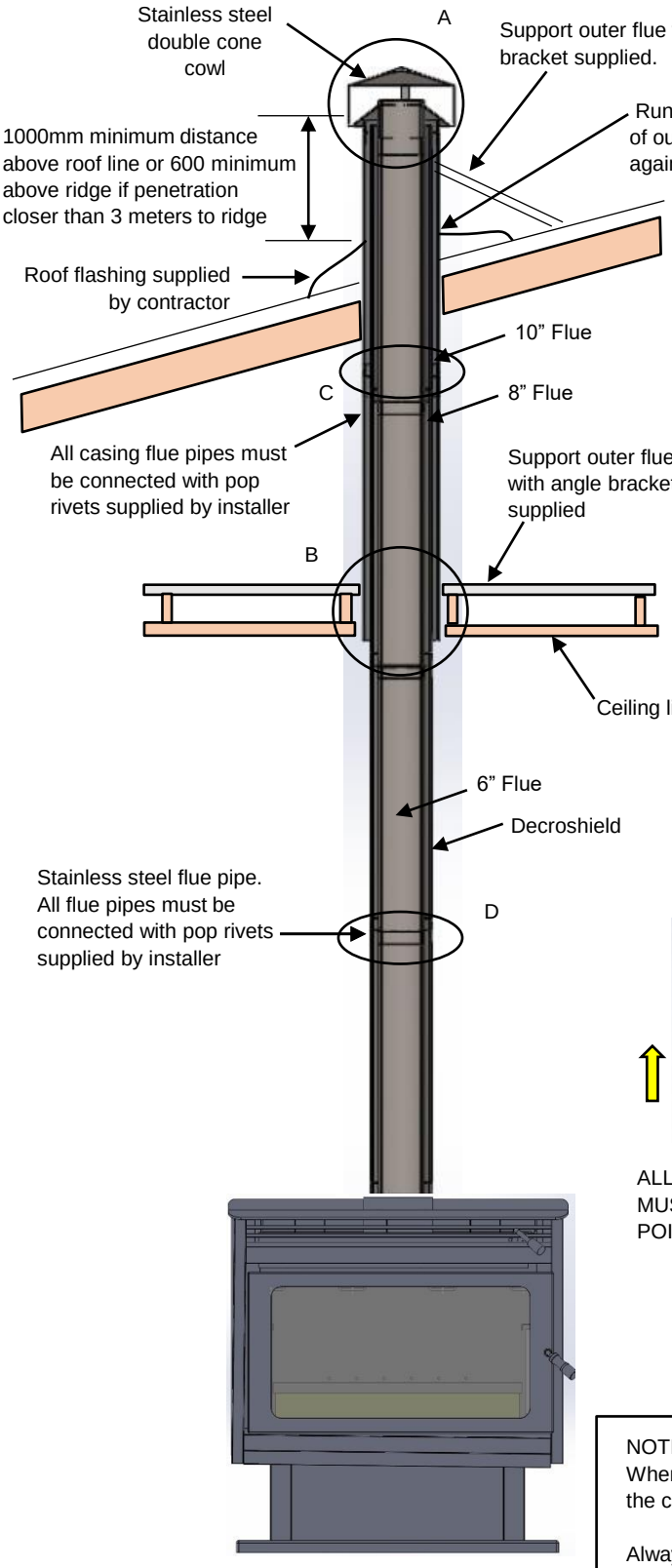

FLAT CEILING

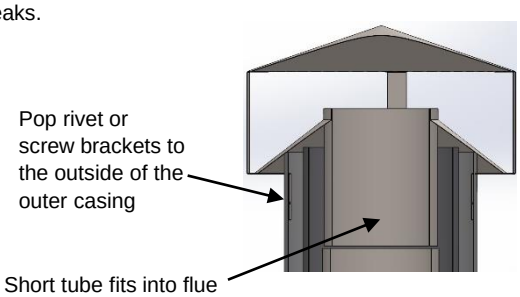

DETAIL A

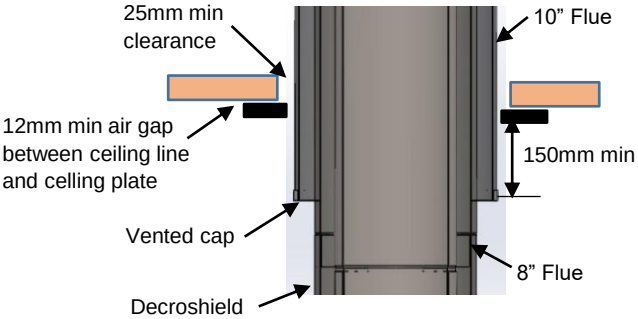

DETAIL B

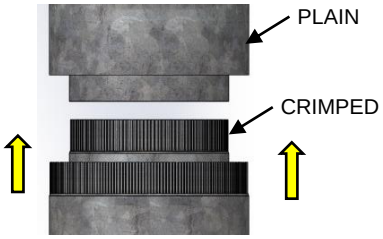

ALL 8"-10" ASSEMBLED FLUES MUST HAVE THE CRIMPS POINTING UPWARDS

DETAIL C

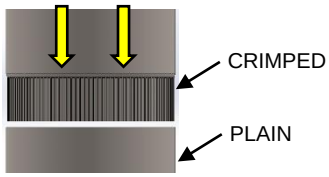

ALL 6" ASSEMBLED FLUES MUST HAVE THE CRIMPS POINTING DOWNWARDS

DETAIL D

NOTE:
When decromesh/heatsheild is fitted, it must finish a minimum 600mm below the ceiling or extend through the ceiling drop box into the outer flue casing.

Always cover flue completely until installation and clean up is complete.

INSTALLATION INSTRUCTION

TRIPLE FLUE KIT

INSTALLATION TO COMPLY WITH AS/NZS 2918

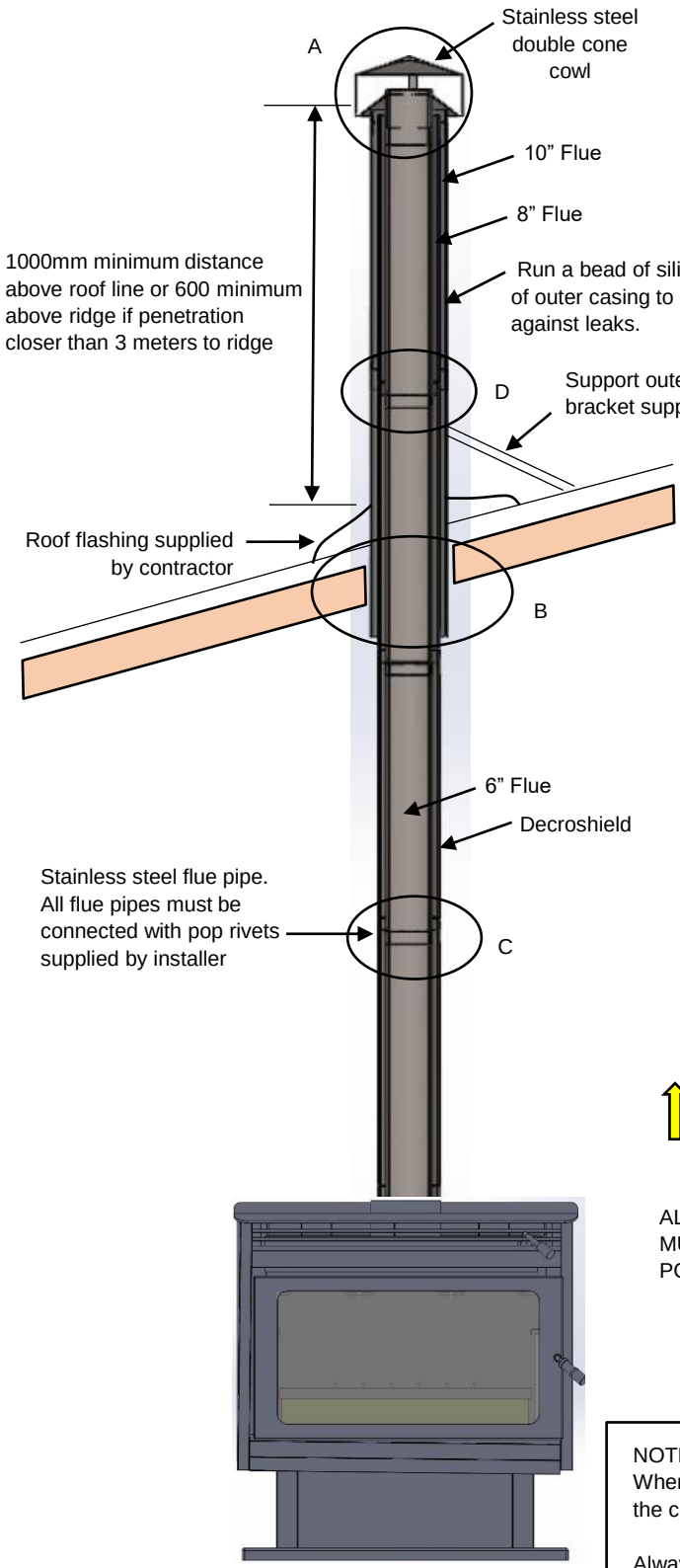

RAKED CEILING

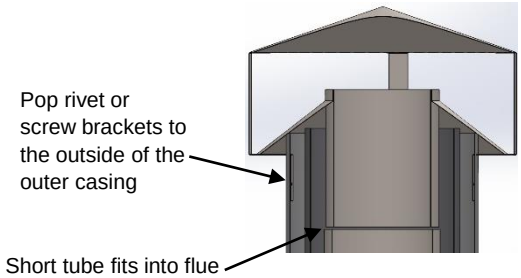

DETAIL A

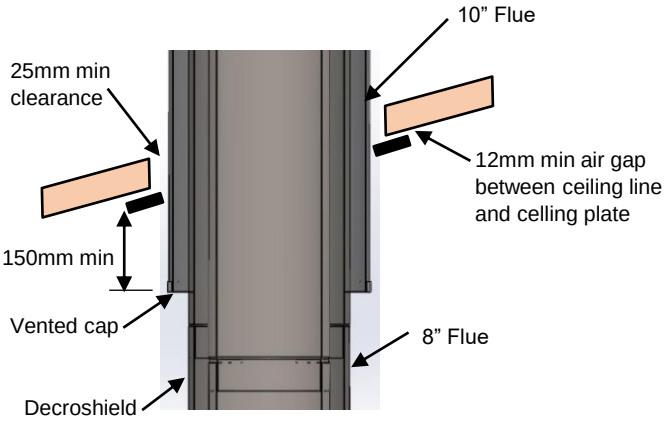

DETAIL B

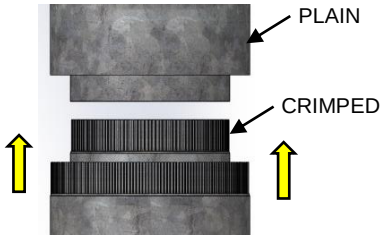

ALL 8”-10” ASSEMBLED FLUES MUST HAVE THE CRIMPS POINTING UPWARDS

DETAIL C

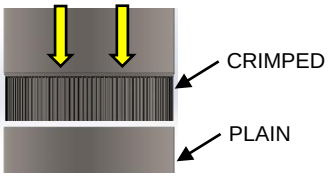

ALL 6” ASSEMBLED FLUES MUST HAVE THE CRIMPS POINTING DOWNWARDS

DETAIL D

NOTE:
When decromesh/heatsheild is fitted, it must finish a minimum 600mm below the ceiling or extend through the ceiling drop box into the outer flue casing.

Always cover flue completely until installation and clean up is complete.

INSTALLATION INSTRUCTIONS

MINIMUM HEIGHT OF FLUE SYSTEM EXIT
INSTALLATION TO COMPLY WITH AS/NZS 2918

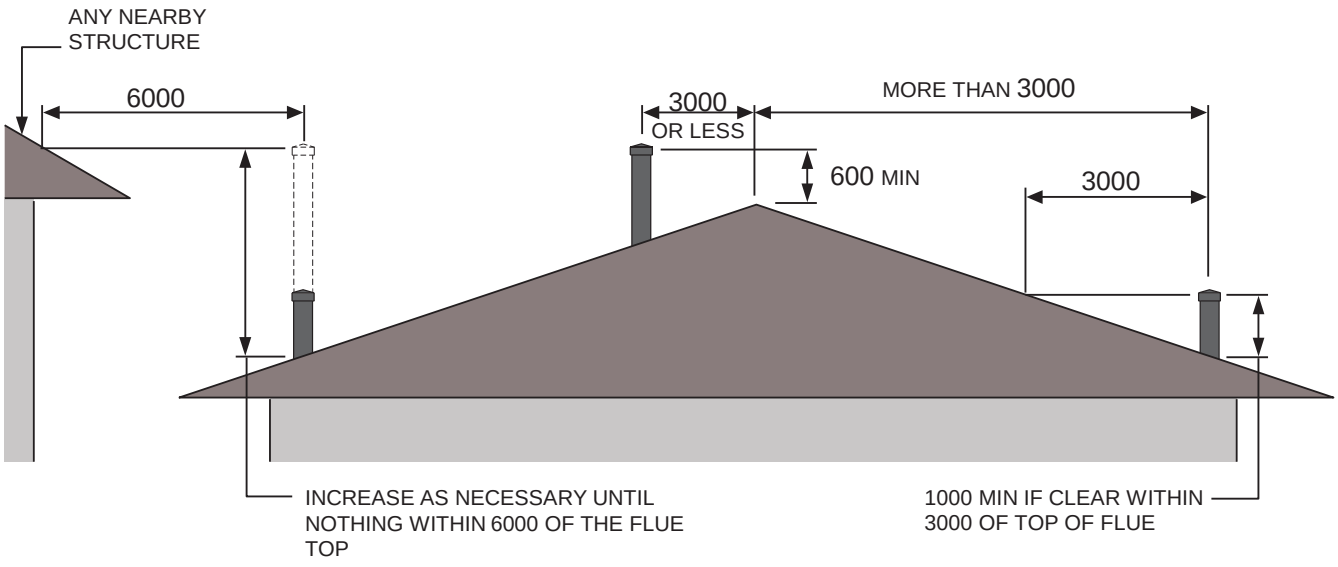

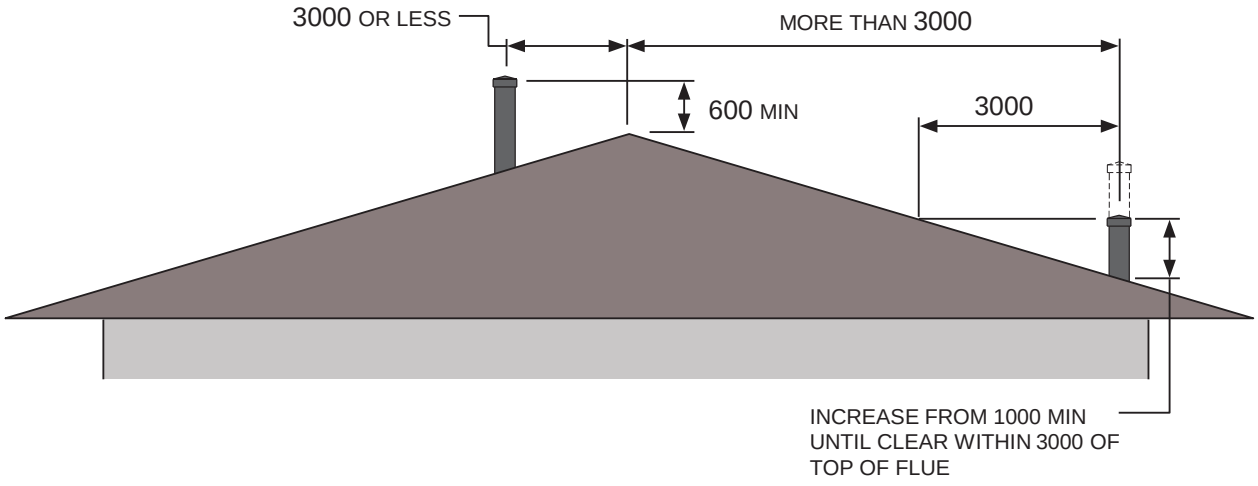

DIMENSIONS IN MILLIMETRES

ABOUT CURING

Your stove has been painted with the highest quality silicone stove paint and has special break in procedures to cure it with heat and make it hard.

VENTILATE WELL

Ventilate the house during the first three times the stove is used. The paint on the stove will give off smoke heavy with carbon dioxide and has an odour, without adequate ventilation, concentrations of smoke could irritate, or be upsetting, so open doors and windows and use a fan if necessary. After these initial burns the paint will be cured and there should be no more smoke.

DON'T TOUCH DURING CURING

Don't touch the surface, It will be soft and gummy during the paint curing phase. Once cured, it will not be soft again.

CURES WITH 3 FIRES

Kemlan slow combustion wood fires are coated with a high temperature paint that requires curing, This is done by burning the fireplace so the casing temperatures are hot enough for the paint to cure/harden to the steel surface. High temperature paint cures at surface temperatures of 180 – 260 degrees, to get the surface temperatures to the required temperatures you need to light a hot fire and let it burn on high for a consistent amount of time 4-6 hours, for 3 separate burns.
The paint should emit a slight smell and in some cases a visible vapour, the first length of active flue should also turn a honey colour this is normal and to be expected. Do not light a small cold fire, this will not cure the paint and can lead to blackening of glass and creosote build-up in flue system.

So remember...

- **Ventilate well**
- **Do not touch during curing**
- **Cure with 3 fires**
- **Call your dealer for any questions**

INSTRUCTIONS FOR OPERATING YOUR KEMLAN SLOW COMBUSTION WOOD BURNING HEATER

1. Open the air inlet fully by sliding the air inlet control to high.

2. Crumple at least three double pages of newspaper into loose balls and place them into the centre of the firebox.

   Cross lay at least 15 to 20 pieces of kindling on top of the paper – if pine is used, the size should vary from the thickness of a pencil to that of a knife handle – if hardwood is used split it even smaller.

3. Light the paper and close the door.

   Once the kindling is well alight, add a few pieces of slightly larger hardwood, split to approximately 25mm x 50mm (2" x 1").

4. Close the door and leave the air inlet control on high. When the hardwood is well alight (usually 5 to10minutes) and coals are starting to form, larger pieces of hardwood may be added – five or six pieces the equivalent of 50mm x 50mm (2" x 2") is ideal.

   The object is to create a fiercely burning fire of reasonable small hardwood, which will quickly produce a good bed of glowing coals on the floor of the firebox. This will take from 20 to 40 minutes depending on the quality of the firewood.

5 Larger pieces of hardwood may now be added. Half fill the firebox and leave the air inlet control on high until the wood is well alight then close the control approximately a third of its travel.

   Usually about one hour after lighting, the air inlet control can be further shut down to achieve the desired heat output.

   When adding new firewood it is desirable to fully open the air inlet for approximately 10 to 15 minutes until the new pieces are burning well, then it may be returned to its desired setting.

6. To set the fire for overnight burn – two-thirds fill the firebox with hardwood and fully open the air inlet.

   Once the fire is burning well, the air inlet control should be shut down approximately three-quarters of its travel. Setting the air inlet control may be varied to suit your particular requirements and the quality and size of your firewood.

   Remember wet or green wood may cause a dramatic reduction in the heat output of your heater (refer to "Operating Hints" for more details).

7. Have the flue inspected at least once every 12 months as it may require cleaning.

8. Clean out excess ash from the floor of the firebox when required. Do not remove all the ash and in particular leave any pieces of charcoal in the heater as they are good fuel.

9. If the glass door in your heater becomes dirty, your firewood is either green, wet or both. You may be closing the air inlet down too soon after lighting or after adding new firewood.

   To clean the glass, simply use some of the white ash in the firebox. Apply it with a damp cloth in a circular motion. Remove residue with a clean cloth or paper. Do not clean the glass when the heater is operating.

10. To clean the painted surface, simply dust with a soft duster and wipe over with a damp cotton cloth. Only clean when the heater is cool.

IMPORTANT:
UNDER NO CIRCUMSTANCES SHOULD ANY SOLVENTS SUCH AS METHYLATED SPIRITS, PETROL, MINERAL TURPENTINE ETC BE ALLOWED TO COME IN CONTACT WITH THE PAINTED SURFACE OF THE HEATER AS DAMAGE TO THE FINISH WILL RESULT. IF AN ACCIDENT DOES OCCUR, SPRAY CAN PAINT IS AVAILABLE FROM YOUR NEAREST KEMLAN DEALER.

OPERATING HINTS

To get the best from your Kemlan heater it is essential that you use good firewood, and use it correctly Many people do not understand the principle of using a wood burning appliance and we suggest that it will be worth your while to study the following extract from a well known American publication.

PRINCIPLES OF COMBUSTION: HOW WOOD BURNS

Technically, wood does not burn. What burns is the volatiles and charcoal that are created. That is why wood will not catch on fire immediately when you put a match to it; it has to first undergo the chemical changes that create the volatiles, and a match does not create enough heat to activate the process. As kindling and paper evaporate the moisture in the wood, the wood absorbs heat. At a certain point, gases are given off and when these volatiles reach 480 degrees F, or the "Flash point", as it is called, they will burst into flame if sufficient oxygen is present. The volatiles give off more heat than does charcoal, which is why a fire with flames (which burn the volatiles) produces more heat than one that is all charcoal.

Since the volatiles are gases and since heat rises, taking the gases with it, it is very easy to create a situation in which most of the volatiles go up the chimney almost as soon as they are produced. This is what happens with a roaring fire and, to a lesser extent, with an open fire. One of the reasons (but only one) that a freestanding wood stove produces more heat than an open fire is that the volatiles are contained within the firebox and are not so quickly dissipated up the chimney. A stove that is baffled is merely one that has interior construction design to keep the volatiles in the firebox longer; the longer they are in the firebox, the more completely they burn. The more completely they burn, the more heat is produced. It's that simple.

Since the flames burn the volatiles and produce heat, the ideal situation is the longest possible flame path. As soon as wood burners understand this, they tried to devise ways of making the flame path longer than in an ordinary open fire. Even though the role of oxygen in combustion was not under- stood in Ben Franklin's time, Franklin did realize the importance of more completely burned volatiles. His solution was to try to invent a downdraft stove
– one that sent the volatiles back down through the fire – but he never succeeded in getting it to work. A downdraft goes against the nature of volatiles, which is to rise. In more recent times, there have been some successful downdraft – or partial downdraft – stoves created and some of the fireplace stoves and units utilise this principle. Ideally, it would be best if the volatiles could be redirected down through the fire several times, until they were al- most totally consumed. This would not only make the maximum use of the heat potential of the wood; it would reduce creosote build-up to almost zero. Perhaps someday an ingenious inventor will design a unit that does this; so far no has been able to.

MOISTURE AND COMBUSTION

As we have seen, dry wood ignites faster and burns better – with higher heat production – than wet or green wood. The difference between the amount of heat produced by dry wood and green wood is so great that a dry softwood of good grade will produce more heat than green hardwood. Green white ash, for instance, is not as good a fuel as dry tamarack.

The reason for the superiority of dry wood is easy to understand. Heat cannot be produced until moisture has been driven off. Since even so-called seasoned dry wood contains approximately 20 percent moisture, it takes time for any fire to begin producing useable heat. Wet wood, which can have a moisture content of over 100 percent (due to the way moisture is measured), will take that much longer to produce heat. Meanwhile, the fire will produce smoke and creosote and very little heat. This was brought sharply to my attention when I installed my first wood heater. To my surprise and delight, I found it comfortably heated eight rooms, where I had expected to heat only two or three. After some time, when I had someone helping me run the fire, I suddenly noticed that the house was chilly. We added more wood and adjusted the draft controls, but nothing we did seemed to help. It finally occurred to me to check the woodpile. My friend had been getting green wood from a stack that was drying, instead of from the dry-wood stack. The difference the green wood made was so dramatic I will never forget it.

HOW TO TEST WOOD FOR DRYNESS

There are two easy ways for even a novice to spot dry wood. Dry wood tends to "check". Look at the log ends and you will see cracks radiating from the centre of the log. If the logs have been split, the cracks will be harder to find because wood tends to split along the cracks.

Another test for dry wood is the sound it makes when two logs are banged against each other. Green wood will make sort of a dull thud; dry wood makes a nice crisp, sharp sound. Once you have heard the two, you will remember the difference.

FROM THE ABOVE EXTRACT SEVERAL FACTS BECOME APPARENT:

1. It is vital that your firewood be dry and seasoned.

2. A good hot fire of kindling and smaller pieces of fuel must be established before adding larger logs.

3. The larger logs should be well alight before slowing down the combustion by adjusting the air intake.

4. A hot bed of coals needs to be maintained to ensure continued combustion in the firebox.

5. When new timber is added to the firebox the air control should be opened until the fuel is well alight before damping it down again. This will take from 10 to 20 minutes.

6. When setting the controls for overnight burn you will need to experiment with the settings to suit your particular type of fuel. Very dense hardwood requires more air to combust and over damping will result in charring and smoking causing the glass in the door to become dirty. The same will apply with fuel which is not fully seasoned or is not dry enough. Kemlan have followed a policy since 1969 of checking on all complaints about poor performance of their heaters and apart from a few instances of incorrect installation (mostly insufficient flue length) all problems have been directly related to incorrect operation and/or poor fuel. We know you will experience many years of satisfaction from your heater if you follow the above advice.

NATIONAL
Certificate of Compliance
And Verification Statement
For Solid Fuel Heaters

This is to certify that the appliance stated on this Certificate has a particulate Emission Factor not greater than the maximum allowable when tested to the appropriate Standard.

Valid to : 24th MAY 2022

Make	**KEMLAN**
Model	**XL MK111**
Type	**FREESTANDING**
Category	**Slow Combustion Heater**
Test Laboratory	**HRL Technology**
Fuel Type	**HARDWOOD**
Standards	**AS/NZS 4013:2014**
	AS/NZS 4012:2014

ISSUED BY :

Australian Home Heating Association Inc.

CERTIFICATE No: H963/0516 **DATE 27/5/2019**

Certification has been issued to Kemlan Industries
13 French Avenue, Brendale. Queensland 4500

WARRANTY

1. Kemlan wood heaters carry a warranty on the 6mm firebox for a period of ten (10) years.

2. This warranty also covers other components of the heater for a period of one (1) year. These components include the baffle plate, handle assembly, secondary air tubes and fan.

3. Kemlan's warranty covers the wood heaters against defects in materials and manufacture.

4. THIS WARRANTY DOES NOT COVER –

4.1 Failure to comply with manufacturer's operation instructions.

4.2 Normal wear and tear or damage caused by incorrect installation.

4.3 Any form of rust and/or corrosion to the painted finish of the heater.

4.4 Damage to the glass in the door, if the damage is caused by impact or misuse.

4.5 The cost of collection and delivery of the wood heater and/or parts.

4.6 Damage caused by water ingress.

4.7 Cost of removal of defective heater or re-installation of replacement heater.

4.8 Failure to use fireplace components supplied by Kemlan Industries Pty Ltd.

4.9 Cost of inspection for damaged heater.

5. CLAIMS –

5.1 (I) Kemlan will provide a full replacement of the heater in the first five years after installation.

(ii) Replacement in the subsequent five years (i.e. sixth to tenth year after installation will be on the following basis. Owner will pay fifty percent of the current retail price, if the claim is made in the sixth year – tenth year after purchase.

5.2 Replacement of heater subject to all conditions in section four of warranty.

5.3 Should any defects occur, contact the Kemlan distributor from whom you purchased the heater.

5.4 Under this warranty the defective parts will be repaired or replaced, free of charge.

6. The fireplace installation must comply with the relevant local statutes, ordinances, regulations and by-laws.

7. THIS WARRANTY IS VOID IF:

7.1 The appliance has been over-fired or operated in atmospheres contaminated by chlorine, fluorine or other damaging chemicals. Over-firing can be identified by, but not limited to, warped plated or tubes, rust coloured cast iron, bubbling, cracking and discolouration of steel or enamel finishes.

PLEASE COMPLETE AND RETAIN THIS SECTION FOR YOUR RECORDS

Purchased from: .....
Address: .....
Date of Purchase: .....